Conductor Rail System for Shuttles

MultiLine Program 0835

CONDUCTIX wampfler

Table of Contents

Conductor Rail System for Shuttles
MultiLine 0835

General Information

The multi-pole, modular, compact conductor rail system **Multi**Line 0835 is designed specifically for use in intralogistics; e.g. shuttle systems or transfer units. Its space-efficient dimensions and layout with an expandable number of poles (including protective earth) enables flexible use in similar applications, such as automated small-parts storage systems, longitudinal feeding units, or electric shearing stations in the packaging and paper industries.

Optimized handling, a limited number of parts, and an easy connecting method were the main goals for the design of this multi-pole small conductor rail system, significantly reducing the time needed for preparation and installation on-site.

Small conductor rails are mainly used when available installation room inside the track profile is constricted. In many cases the rails need to be installed without proper visibility at the installation site. The **Multi**Line 0835 system is specifically designed to aid the installer in such situations, with details such as tactile markings, self-centering connectors, sturdy clip-on elements, and simple, compact installation appliances.

Photo: DEMATIC GmbH

System Advantages

- Faster, easier installation due to the rigid rail profile and the need for half as many rail brackets as similar systems
- Fewer parts that reduce logistic and installation expenditures
- Predefined connections by using plug-in claw type fasteners
- Reduced installation work due to clip-on fastening and self-aligning connections
- Expandable system length and number of poles
- High rigidity through 2-pole structure and hollow-chamber profiles
- Available as 2 x phase and phase + PE (protective earth) versions

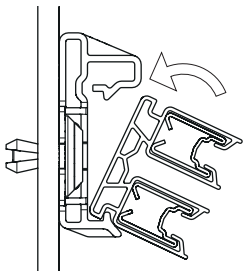

Clip-on bracket

Conductor Rail System for Shuttles
MultiLine 0835

Main Features at a Glance

- **Material requirements** (without Current Collectors):
  Only few single components are needed for a 2-pole aisle.

Example of a 2-pole aisle, length 65 m (without Current Collectors and Cables):

16 Rails (1)
\+ 1 End Segment (2)
\+ 18 Connectors complete (3)
\+ 83 Rail Brackets (4)

= 65 m Aisle length (2-pole)

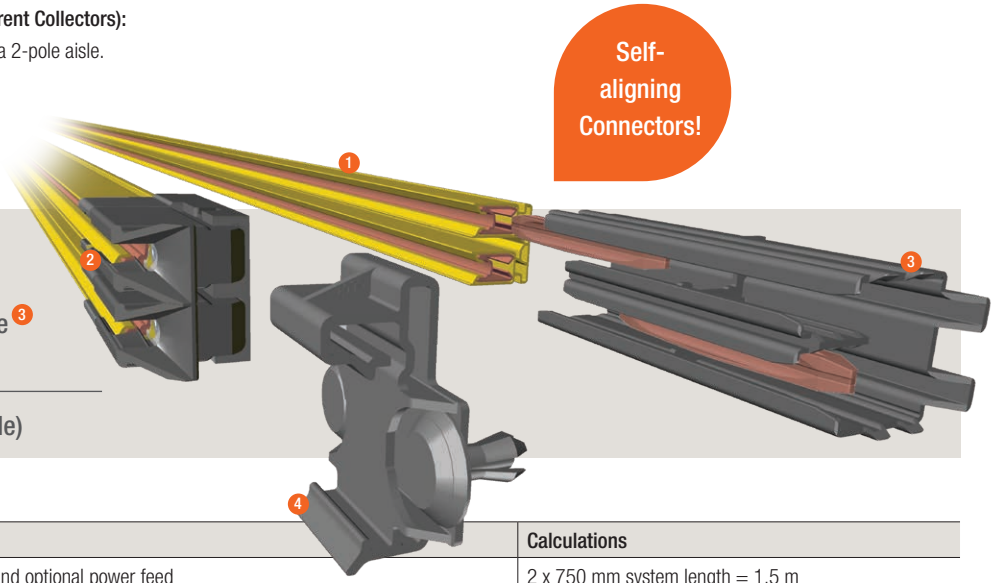

Qty	Parts	Calculations
1	End Segment kit with anchor point and optional power feed	2 x 750 mm system length = 1.5 m
16	Rails @ 4000 mm to cover aisle length incl. 1 fitting part @ 3.5 m (pre-cut)	65 m -1.5 m = 63.5 m/4 m ≈ 16 pcs. 65 m -1.5 m -(15 x 4 m) = 3.5 m
18	Connectors complete (2 x Connectors + 1 x Connector cap)	
83	Rail Brackets	65/0.8 + 2 ≈ 84 pcs. net.

Material not used in every aisle:

Qty	Parts
1	Spare parts pack
1	Assembly kit

- **Installation**
  Installation can be completed in a few steps, mostly without any tools.
  Each part is designed to ensure the correct mounting position primarily by feel, taking into account the low visibility and constricted installation space often prevalent in warehouse aisles.

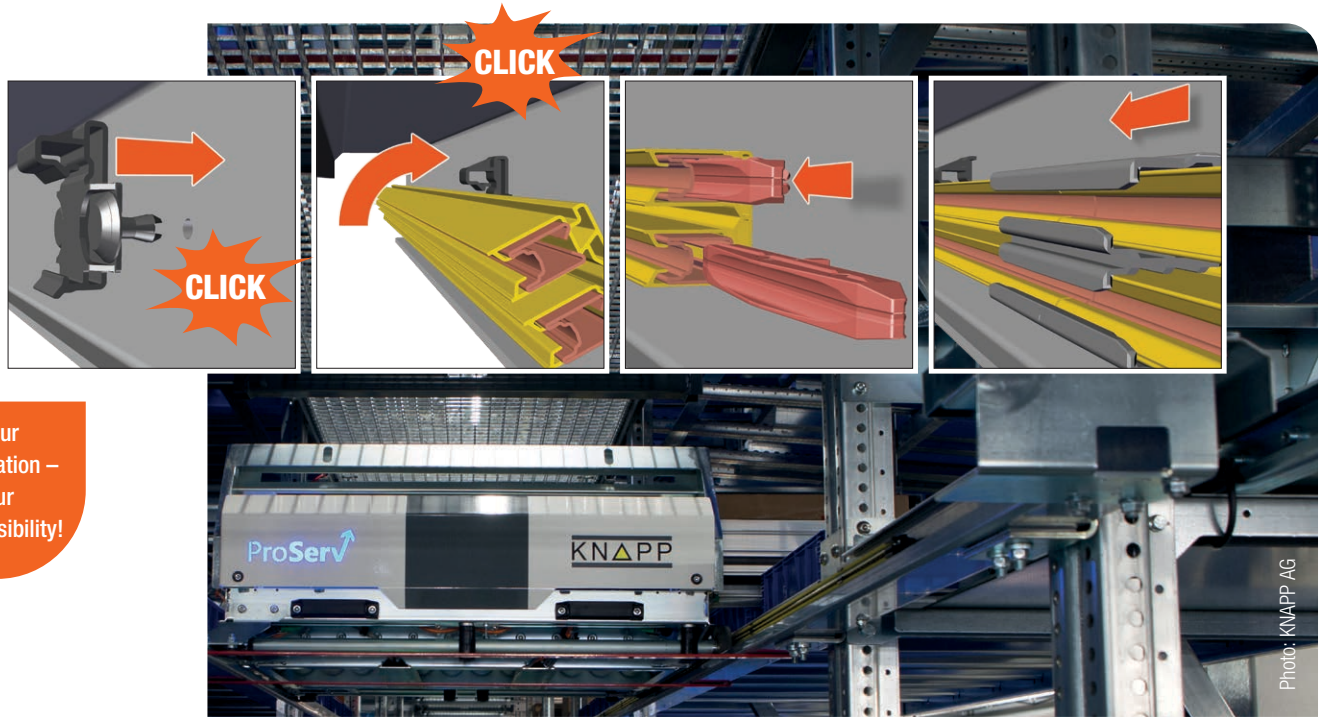

Photo: KNAPP AG

Your installation – our responsibility!

Conductor Rail System for Shuttles
MultiLine 0835

Technical Data

System and application area	2-pole conductor rail for aisles in shuttle systems and automated small-parts storage systems
Installation position	Horizontal rail direction with current collectors engaged laterally (see illustration below)
Rated rail length	4000 mm +/-2 mm at 20°C
Suspension spacing	Rated length 800 mm
System length	Typically 120 m (greater lengths possible, depending on voltage drop and power feed concept)
Travel speed	300 m/min
Rated voltage	230/400 V AC – protective/low voltage min. 24 up to 48 V DC/AC
Current load	Overall system: 32 A (100% duty cycle)
Min. current	1 A (recommended)
Protection class	IP 2X as defined by IEC /EN 60529 [1)]
Resistance at 35°C	0.000747 [Ω/m]
Impedance at 50 Hz/35°C	0.000745 [Ω/m]
Conductor cross section/material	25 mm² copper strip, roll-formed and tempered (Cu-ETP)
Permitted ambient temperature	-5°C up to + 60°C (Max. temperature difference $\Delta T = 40$ K)
Chemical resistance PVC material *	Benzine, petroleum, greases, sodium hydroxide 25%, hydrochloric acid, sulphuric acid 50%. Data based on 45°C ambient temperature and temporary exposure, including non-critical deterioration (e.g. signs of oxidation, discoloration) – please contact us for more information

[1)] Protection class refers to the complete conductor rail system excluding current collectors. On-site provisions are necessary to avoid accidental contact with the current collectors if the voltage is higher than 48 V AC/60 V DC.

* Indicative parameters: please contact us if more aggressive agents are present, e.g. aromates such as solvents and flavor enhancers.

Dimensions, weights, system grid	
Height	38 mm (incl. standard rail brackets)
Depth	98 mm (incl. standard rail brackets and current collectors)
System length	Optional, nominal rail length: 4000 mm
Weight	0.58 kg/m

Insulating cover (stabilized hard PVC; safety warning color (RAL 1018))	
Dielectric strength	22.4 kV/mm as defined by DIN 53481
Flammability	Meets requirements for insulating materials as defined by UL 94 V-0; flame-retardant and self-extinguishing as defined by (IEC) DIN EN 60895-11-10B3, 3 UL-Certificate: ELPX.E16232

Relevant standards	
DIN EN 60664-1; VDE 0110-1: 2008-01	Insulation coordination for electrical equipment in low-voltage installations - Part 1: Principles, requirements and testing (IEC 60664-1:2007); German edition EN 60664-1:2007
DIN EN 60204-1; VDE 0113-1: 2007-06	Safety of machines - electrical equipment of machines - Part 1: General requirements (IEC 60204 - 1:2005, modified); German edition EN 60204-1:2006
DIN EN 60529; VDE 0470-1: 2000-09	Protection classes using housings (IP code) (IEC 60529:1989 + A1:1999): German edition EN 60529:1991 A1:2000

Note: subject to technical change. We recommend consulting Conductix-Wampfler if the system is to be used in applications or conditions other than stated to ensure technical feasibility. Technical statements may restrict each other. In case of doubt we recommend consulting for feasibility.

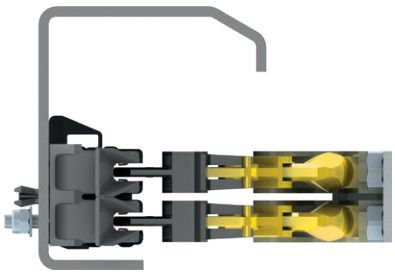

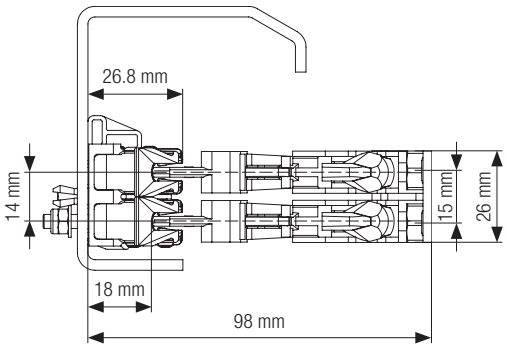

Conductor Rail System for Shuttles
MultiLine 0835

Conductor Rails

Standard rails (4 m length) can be carried easily by one person. Rails can be shortened on-site with a bow saw or jig saw. When ordered in higher quantities, rails shorter than 4 m can be factory-made by request.

- Rated length: 4000 mm
- Insulation: PVC
- Conductor material: copper
- Cross section: 2 x 25 mm²

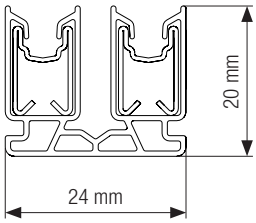

Twin profile with PE (protective earth) conductor (PE marked with a green stripe)

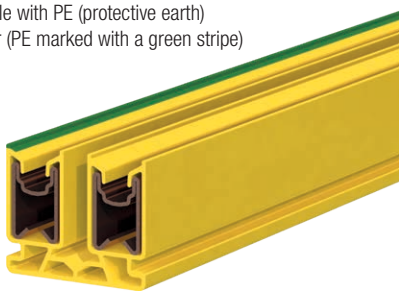

Part No.	Description	Conductor material	Weight [kg]
083516-4X21X11*	2-pole PH (without protective conductor indication)	Copper	2.3
083516-4X21X12*	2-pole PE (with protective conductor indication)	Copper	2.3

* Standard range

SAP Config.-No. for shorter rails: 3134856

End Segment (End Power Feed)

Designed as closing and optional power feed for the conductor rails, an end segment (standard length 750 mm) is required on both ends of the rail system.
The end segment with end cap link serves as an anchor point.

- Rated length: 2 x 750 mm
- Insulation: PVC
- Conductor material: copper
- with optional power feed incl. ring cable lug
- max. cable cross section: 6 mm²

Scope of delivery: 2 x end segment with optional power feed (cable lug), excl. cable

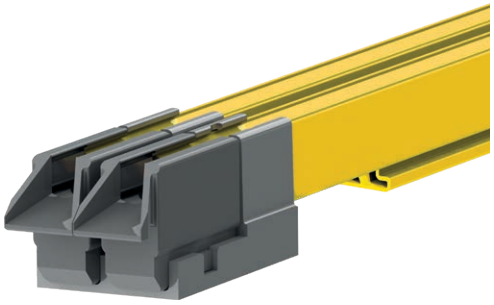

End segment with anchor point

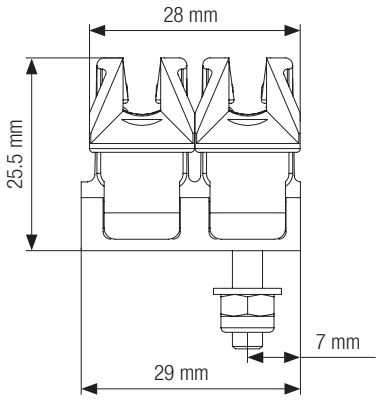

End segment without anchor point

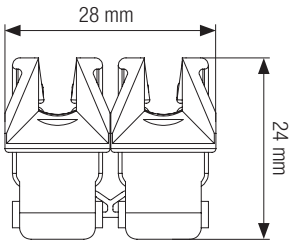

Part No.	Description	Connection	Ampere [A]	No. of segments	Poles	Weight [kg]
083553-260X211*	End feed 0835 Cu 2P PH 2.5 mm²	2.5 mm²	24	2	2 x PH	0.5
083553-260X212*	End feed 0835 Cu 2P PE 2.5 mm²	2.5 mm²	24	2	1 x PH + 1 x PE	0.5
083553-260X611*	End feed 0835 Cu 2P PH 6.0 mm²	6.0 mm²	32	2	2 x PH	0.5
083553-260X612*	End feed 0835 Cu 2P PE 6.0 mm²	6.0 mm²	32	2	1 x PH + 1 x PE	0.5

* Standard range

Conductor Rail System for Shuttles
MultiLine 0835

Rail Connectors

Plug-in connectors for two conductor rails. Consisting of:

- two plug-in connectors for conductor rails
- one connector cap (with centering function)

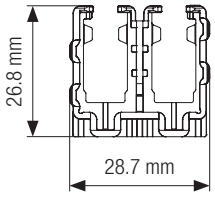

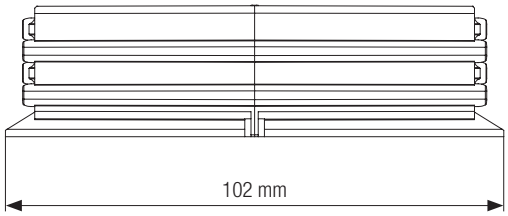

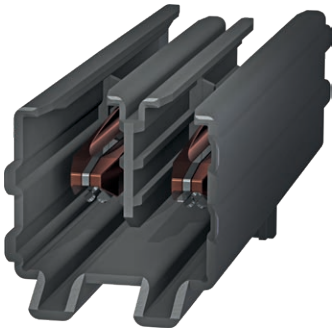

Part No.	Description	For rail material	Poles	Weight [kg]
083526-6*	Connector 0835 2P PL Cu	copper	2	0.05

* Standard range

Standard Rail Brackets

As an alternative to standard rail brackets, rail brackets for specific track profiles can be custom-made (see page 10 for examples).

- Fastened by plastic expanding rivets
- Max. thickness of mounting surface: 6 mm
- Rated suspension spacing: 800 mm
- Mininum distance to connector cap: 150 mm

Delivery includes expanding rivets.

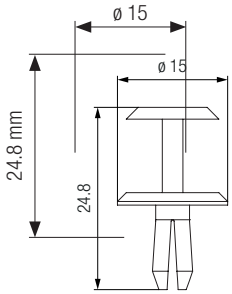

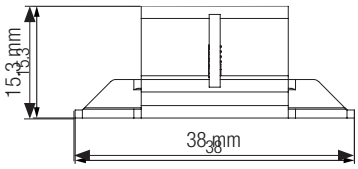

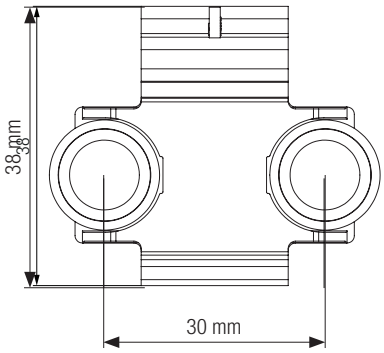

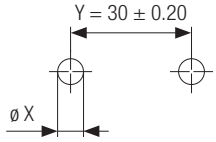

Diameter "X" of bore for mounting holes [mm]	Thickness of mounting surface [mm]
ø 4.6 ± 0.05	3
ø 4.7 ± 0.05	4
ø 4.8 ± 0.05	5
ø 4.9 ± 0.05	6

Part No.	Description	Pack size	Weight [kg]
083548-02-14*	Rail brackets, incl. expanding rivets	20 pcs.	0.01

* Standard range

Conductor Rail System for Shuttles
MultiLine 0835

Customized Rail Brackets

Fastening the rail brackets takes a considerable amount of the installation time. Because system 0835 uses only half as many rail brackets as similar systems, installation takes correspondingly less time. To further optimize the system, we can design, produce, and deliver customized (clip-on) brackets, matching the manufacturer's track profile.

Here are two examples of customized rail brackets, adapted for the customer's track profile:

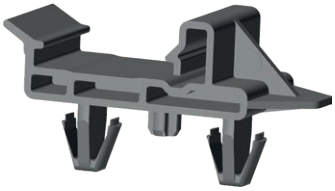

1 x 2-pole

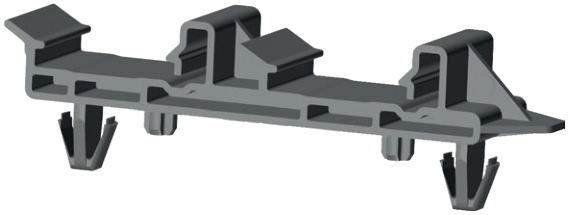

2 x 2-pole

Current Collector Units

The current collectors are clipped into the supporting plate, which allows for easy replacement without tools.

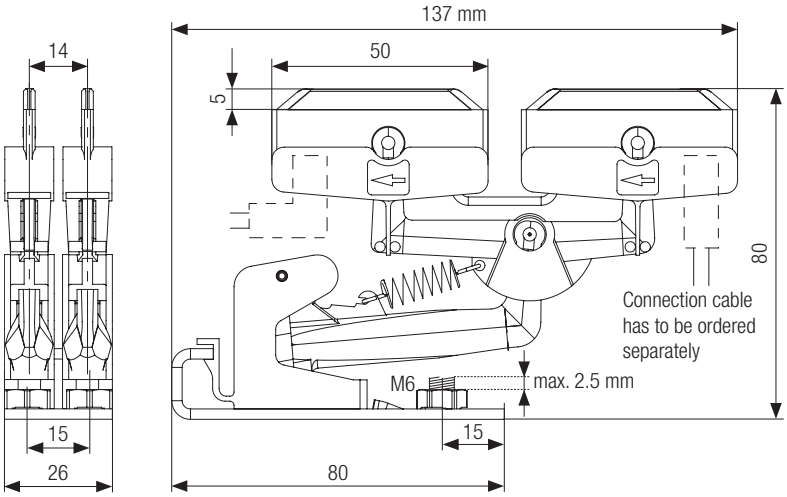

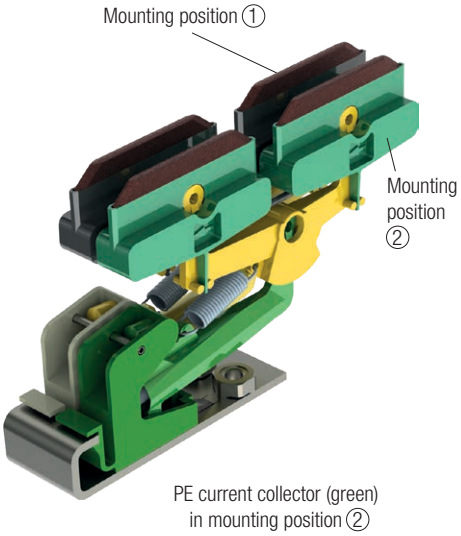

Part No.	Brush material	Rated current	PH/PE	PE Position	Weight [kg]
081508-02415*	Graphite	2 x 16 A	PH	–	0.1
081508-02435*	Graphite	2 x 16 A	PE	①	0.1
08-S265-2287*	Graphite	2 x 16 A	PE	②	0.1
081509-02415*	Copper graphite	2 x 25 A	PH	–	0.1
081509-02435*	Copper graphite	2 x 25 A	PE	①	0.1
08-S265-2288*	Copper graphite	2 x 25 A	PE	②	0.1

* Standard range

Note:

To ensure proper functioning of the system, the precise mounting position of the current collectors, the right connection cable and its routing need to be taken into account (see system layout, page 13). The connection cables should be fine-stranded (as defined by DIN VDE 0295, Class 6) and highly flexible.
Installation of the PE current collector in position "PE" only.

Conductor Rail System for Shuttles
MultiLine 0835

Connection Cables with a straight Push-In Sleeve for free installation

The Connection cables are highly flexible with **double** insulation (PH) or **single** insulation (PE).
Order in the required length and size.

Connection Cables: PH = black, PE = yellow/green

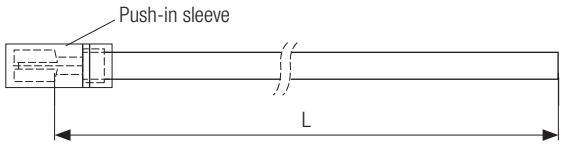

Cross section [mm²]	Part No.		Length [m]	Cable diameter [mm]	Ampere [A]	Weight [kg]
	Phase (PH)	Protective earth (PE)				
1.5	081109-0,5 x 1,5 x 21	081109-0,5 x 1,5 x 42	0.5	4/3	24	0.023
1.5	081109-1 x 1,5 x 21	081109-1 x 1,5 x 42	1	4/3	24	0.023
2.5	081109-0,5 x 2,5 x 21	081109-0,5 x 2,5 x 42	0.5	5/3.5	32	0.037
2.5	081109-1 x 2,5 x 21	081109-1 x 2,5 x 42	1	5/3.5	32	0.037
4	081109-1 x 4 x 21	081109-1 x 4 x 42	1	6	42	0.059

Other lengths and sizes available by request

SAP Config.-No. for cables: 3126191

Connection Cables with a straight Push-In Sleeve for protected installation

The Connection cables are highly flexible with **single** insulation.
Order in the required length and size.

Connection Cables: PH = black, PE = yellow/green

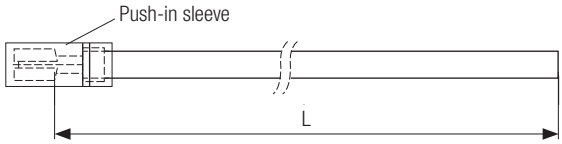

Cross section [mm²]	Part No.		Length [m]	Cable diameter [mm]	Ampere [A]	Weight [kg]
	Phase (PH)	Protective earth (PE)				
1.5	081109-0,5 x 1,5 x 41	081109-0,5 x 1,5 x 42	0.5	3	24	0.016
1.5	081109-1 x 1,5 x 41	081109-1 x 1,5 x 42	1	3	24	0.016
2.5	081109-0,5 x 2,5 x 41	081109-0,5 x 2,5 x 42	0.5	3.5	32	0.034
2.5	081109-1 x 2,5 x 41	081109-1 x 2,5 x 42	1	3.5	32	0.034

Other lengths and sizes available by request

SAP Config.-No. for cables: 3126191

Connection Cables with a right-angle Push-In Sleeve for protected installation

The connection cables are highly flexible with **single** insulation.
Order in the required length and size.

Connection Cables: PH = black, PE = yellow/green

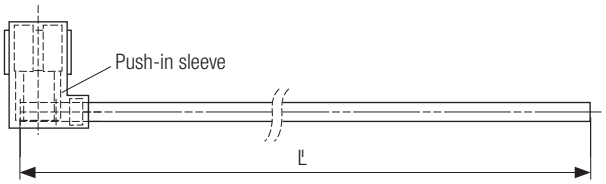

Cross section [mm²]	Part No.		Length [m]	Cable diameter [mm]	Ampere [A]	Weight [kg]
	Phase (PH)	Protective earth (PE)				
1.5	081509-0,5 x 1,5 x 41	081509-0,5 x 1,5 x 42	0.5	3	24	0.016
1.5	081509-1 x 1,5 x 41	081509-1 x 1,5 x 42	1	3	24	0.016
2.5	081509-0,5 x 2,5 x 41	081509-0,5 x 2,5 x 42	0.5	3.5	32	0.034
2.5	081509-1 x 2,5 x 41	081509-1 x 2,5 x 42	1	3.5	32	0.034

Other lengths and sizes available by request

SAP Config.-No. for cables: 3126191

Note:

Double-insulation cables must be used with voltages higher than 48 V. Power rating according to VDE 0298-4, installation type C at 100% duty cycle, ambient temperature 30°C, 1.5 mm² max. 19.5 A, 2.5 mm² max. 27 A, 4.0 mm² max. 36 A, 6.0 mm² max. 46 A. Cables in accordance with DIN VDE 0298 part 4; Connector in accordance with DIN 46 257 part 3.

Conductor Rail System for Shuttles
MultiLine 0835

Assembly Kit

The stopper is clamped to the first profile, to join the rails together with a mounting cap and a soft-head hammer. Material: shock-resistant plastic

Contents:
1 x Stopper
1 x Mounting cap

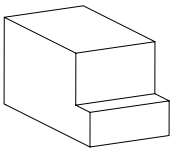

Stopper

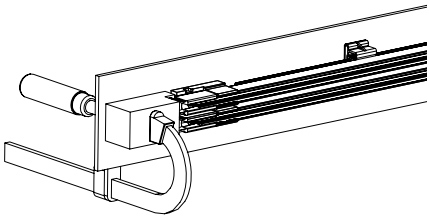

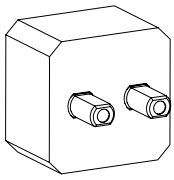

Mounting cap

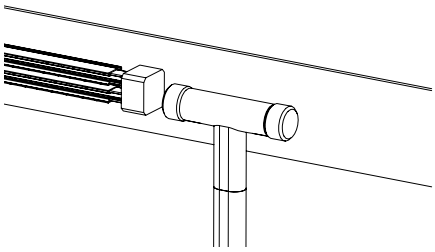

Part No.	Description	Pack size	Weight [kg]
08-V015-0463*	Assembly kit	1	0.8

* Standard range

Spare Parts Pack

The pack includes all small parts to replace missing or worn parts, as well as stopper and mounting cap.

Contents:
1 x End cap link
4 x End caps complete incl. clamping unit
4 x Crimp ring cable lugs 2.5 mm²
4 x Crimp ring cable lugs 6.0 mm²
2 x Connector caps
4 x Plug connectors to join copper rails
5 x Standard rail brackets
12 x Expanding rivets
1 x Assembly kit

Part No.	Description	Pack size	Weight [kg]
08-S089-0002*	Spare parts pack	1	1.0

* Standard range

Current Collector Replacement and Spare Parts

Note: We recommend replacing the entire current collector rather than just the shoe. In addition to the abrasion on the collector shoe, the bearings, joints, and springs of the current collectors wear out over time.

Part No.	Description	Rated current/brush material	Weight [kg]
081508-01415*	Dual current collector 1P 2 x 16 A PH REV	32 A graphite	0.050
081508-01425*	Dual current collector 1P 2 x 16 A PE REV	32 A graphite	0.050
081509-01415*	Dual current collector 1P 2 x 25 A PH REV	50 A copper graphite	0.050
081509-01425*	Dual current collector 1P 2 x 25 A PE REV	50 A copper graphite	0.050
08-S138-0170-001	Mounting plate for current collector – PE Position ① (see page 10)	–	0.050
08-S138-0170-002	Mounting plate for current collector – PE Position ② (see page 10)	–	0.050

* Standard range

Conductor Rail System for Shuttles
MultiLine 0835

System Layout

To allow for thermal expansion of the system, only one anchor point must be placed at the start of the installation.
The end segment with end cap link also serves as an anchor point.

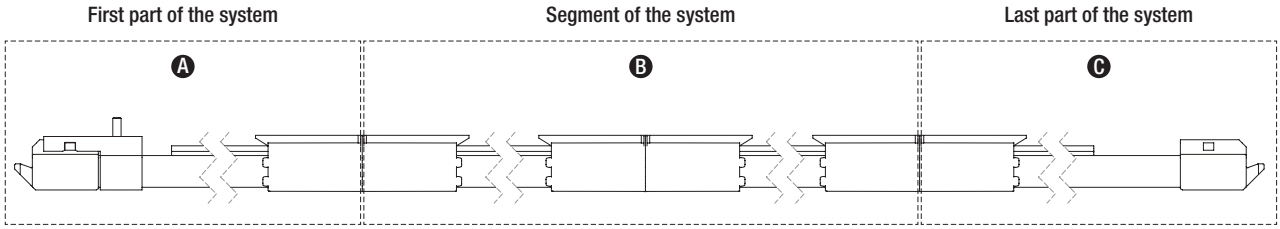

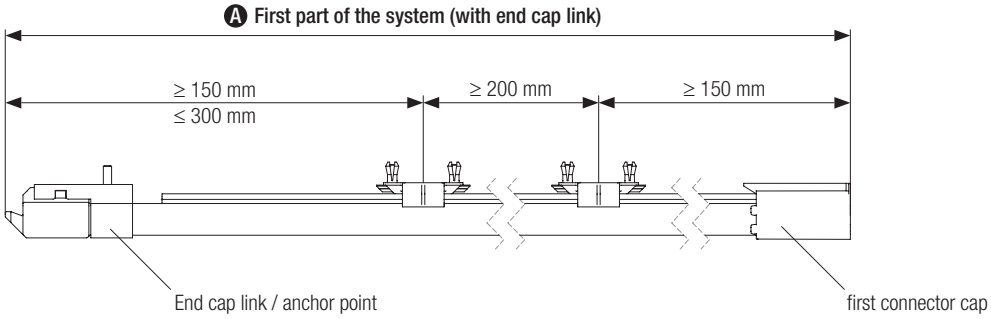

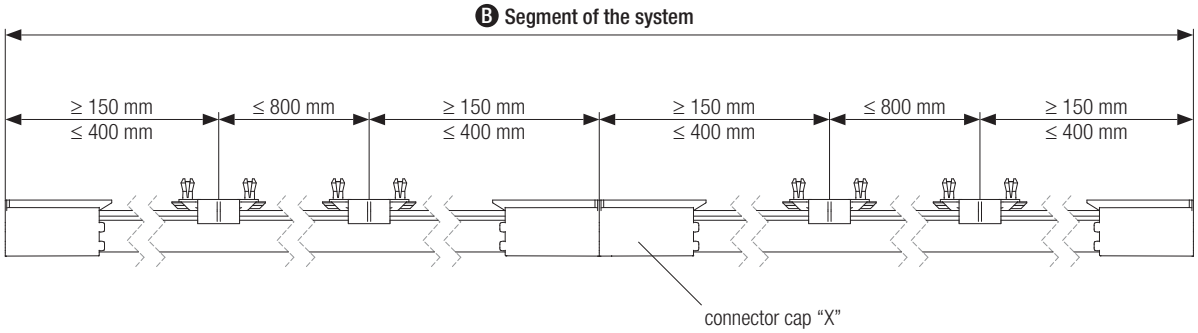

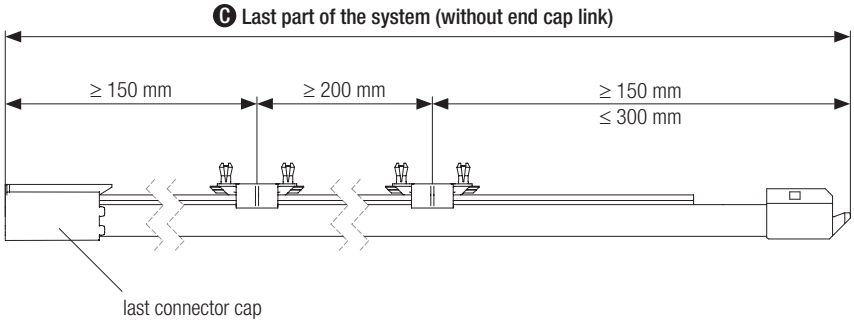

Conductor Rail System for Shuttles
MultiLine 0835 – FAQ

Is a vertical installation possible, e.g. on an automated small-parts storage system mast?

The system is designed and optimized for horizontal installation. Suitability in vertical installations, especially in regards to highly dynamic movements, depends on technical requirements and installation sites. Please contact us for possible approval and part modifications.

Are curved sections feasible?

The purposely rigid structure of the rails does not allow curved sections. If required, parts from a compatible product line can be combined with the 0835 system.
Please contact us and provide a drawing of the intended layout.

Can the rails be easily replaced in case of damage?

If the system is precisely installed in a secure location within a shuttle application, mechanical or electrical damages to the rails are unlikely to occur. However, rails can be replaced after shutting off the system and following these steps:
Using a flat-blade screwdriver, unclip the rail from the brackets ahead and behind the place of repair, and cut off the damaged part with a bow saw or jig saw. Deburr the rail. Pull down the insulating profile a few centimeters and cut off 5 mm of the insulation. Measure the fitting piece and cut accordingly. Reinstall the rail and connect, using new rail connectors.

What is the maximum amperage of the system?

The system is designed for a rated continuous current of 32 A. This value is significantly higher than the average power consumption of shuttle applications. The declaration of a cross section of 100 A on rails is necessary to factor in voltage drop.

Is it possible to configure a three-phase system?

A 400 V-system with three phase (PH) conductors and one protective earth (PE) conductor is feasible by combining two rail pairs (1 x 2-poles PH and 1 x 2-poles PH and PE). According to international standards the protective earth (PE) conductor is marked green and yellow to prevent confusion with phase (PH) conductors.

How much time can actually be saved during installation?

Time measurements taken during installations in shuttle applications and transfer units show that fewer installation parts (-65%) and ease of handling (due to the design of the parts) reduce distribution and installation times by 50% to 60% when compared to similar single-pole small-scale conductor rail systems.

Are there other benefits?

Fewer parts and pieces means easier purchasing logistics. Another benefit is the easy installation due to plug-in claw type fasteners. This technology allows for fast personnel training and ensures reproducible and continuous contact quality. Undetected mistakes made during installation are prevented, insofar as feasibly possible.

Is the MultiLine 0835 system compatible to the SingleFlexLine 0815 system?

Conductor material and geometry, as well as current collectors and basic dimensions have been adapted from the 0815 system. Upgrading from 0815 to 0835 is possible without exchanging any of the moving parts. With little modification, the systems can be form-fitted, or parts from the 0815 system can be integrated into the new 0835 system.

Other Products from Conductix-Wampfler

The products described in the this catalog represent a few of the products from the broad spectrum of Conductix-Wampfler components and systems for the transfer of energy, data, gases, and fluids. The solutions we deliver for your applications are based on your specific requirements. In many cases, a combination of several different Conductix-Wampfler products are needed to fill the application. You can count on all of Conductix-Wampfler's business units for hands-on engineering support - coupled with the perfect solution to meet your energy management and control needs.

Motor driven cable reels

Motor driven reels by Conductix-Wampfler are the perfect solution for managing long lengths of heavy cable and hoses in very demanding industrial applications. Monospiral, level wind, and random wind spools.

Slip ring assemblies

Whenever powered machinery needs to rotate 360⁰, field proven slip ring assemblies by Conductix-Wampfler can flawlessly transfer energy and data. Here, everything revolves around flexibility and reliability.

Conductor bar

Whether they are enclosed conductor rails, expandable single-pole bar systems, or high amperage bar for demanding steel mill use up to 6000 amps. Conductix-Wampfler's conductor bar is the proven solution to reliably move people and material.

Spring driven cable reels

We have 60 years experience and trusted brands such as Insul-8, Wampfler, and IER. We offer small cord reels all the way to large multi-motor units, a wide range of accessories, and hazardous location reels.

Cable Festoon systems

It's hard to imagine Conductix-Wampfler cable trolleys not being used in virtually every industrial application. They are reliable and robust and available in an enormous variety of sizes and models.

Push Button Pendants

Our ergonomic pendants are ideally suited for industrial control applications. They are available in a wide range of configurations for overhead cranes and other machinery.

Radio remote controls

Safe, secure, and reliable radios use the latest in microprocessor technology. Available in several models for overhead crane control and other types of machinery.

Inductive Power Transfer IPT®

The contact-less system for transferring energy and data. For all tasks that depend on high speeds and absolute resistance to wear.

Data Transfer: ProfiDAT® I Nexus

Safe & reliable wireless communication using slotted waveguide technology that's PROFIsafe compatible.

Nexus NB for narrow band signal transfer over power conductors

LJU Automation EMS Controller

Specialized controllers Programmable by parameters, Ideal for Electrified Monorails at automotive plants, with over 1500 in service worldwide. Adaptable for other applications

BridgeGuard™

Prevents crane to crane and crane to end collisions. IP69K rated for indoor and outdoor use, with a 3 ft to 150 ft range. Compliant with IEC 60068-2-6:2007

Air & Spring balancers I Air hoists

Conductix-Wampfler offers the full line of ENDO positioning devices. Rugged, reliable steel construction increasing safety and decreasing fatigue and body stress.

www.conductix.us

USA / LATIN AMERICA
10102 F Street
Omaha, NE 68127

Customer Support
Phone +1-800-521-4888

Phone +1-402-339-9300
Fax +1-402-339-9627

info.us@conductix.com
latinamerica@conductix.com

CANADA
1435 Norjohn Court
Unit 5
Burlington, ON L7L 0E6

Customer Support
Phone +1-800-667-2487

Phone +1-450-565-9900
Fax +1-450-951-8591

info.ca@conductix.com

MÉXICO
Calle Treviño 983-C
Zona Centro
Apodaca, NL México 66600

Customer Support
Phone (+52 81) 1090 9519
(+52 81) 1090 9025
(+52 81) 1090 9013

Fax (+52 81) 1090 9014

info.mx@conductix.com

BRAZIL
Rua Luiz Pionti, 110
Vila Progresso
Itu, São Paulo, Brasil
CEP: 13313-534
Customer Support
Phone (+55 11) 4813 7330

Fax (+55 11) 4813 7357

info.br@conductix.com

Contact us for our Global Sales Offices

KAT0835-0001-US